1848847
Executive File Cabinet

Parts and Hardware List

A. Short file bars	4 Pcs
B. Long file bars	4 Pcs

* Please make sure that you have all the parts indicated above before you begin assembly of this item.
* This item should be assembled on a soft surface to prevent scratching the finish during assembly.

File Bar Set-up

Parts required

A. Short file bar	4 pc	B. Long file bars	4 pcs

1. **Insert Small file bars (A).** Place two Short file bars (A) into the cut-outs in the drawer sides. Make sure that the cut-out in the Short file bars (A) is facing up. See Illustration #1

2. **Insert Long file bars (B).** With the cut-out facing down place the Long file bars (B) into the cut-out in the Short file bars (A). See Illustration #1

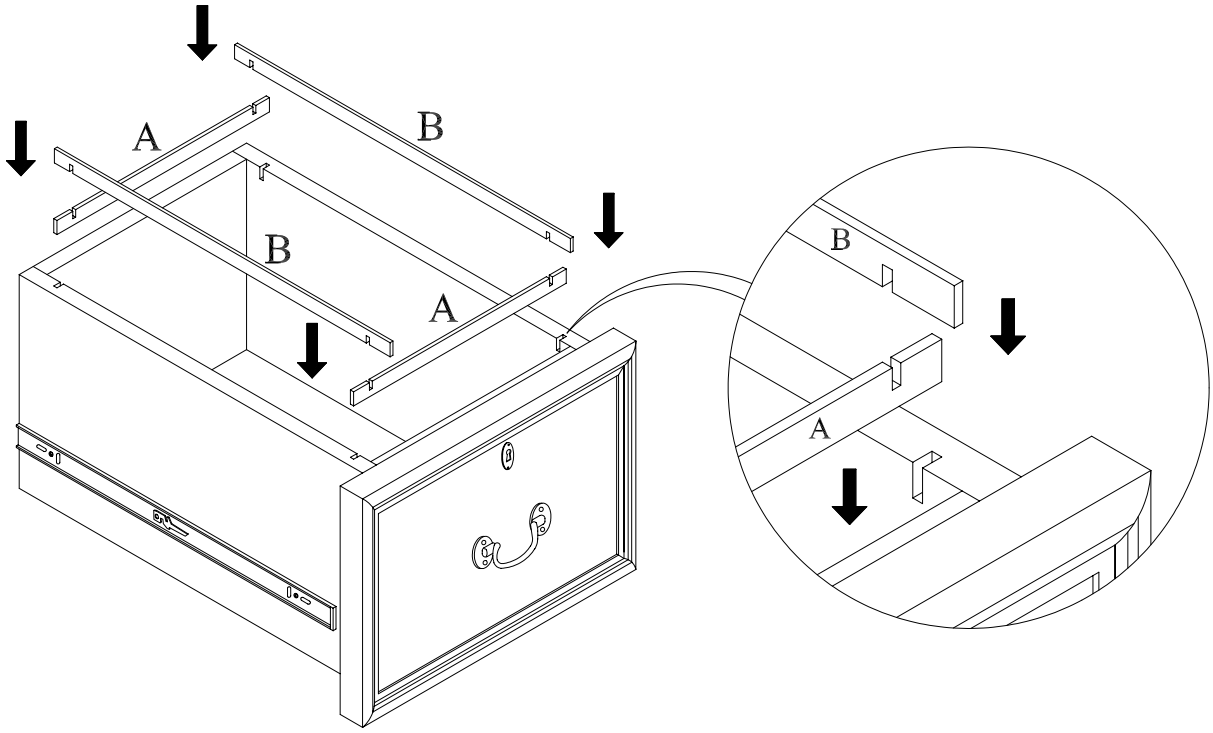

Illustration #1

1848847
Executive File Cabinet

Helpful Notes for Removing Drawer

3. Should you have a need to remove the drawer from the cabinet, do the following: See Illustration #2

a) Pull drawer out so that the runner is fully extended.
b) Simultaneously, depress the black lever on both sides of the drawer. Ease the drawer away from the runner evenly.
c) To reinstall the drawer; align the runner on both side of the drawer with those on the cabinet. Firmly, push the drawer back into place.

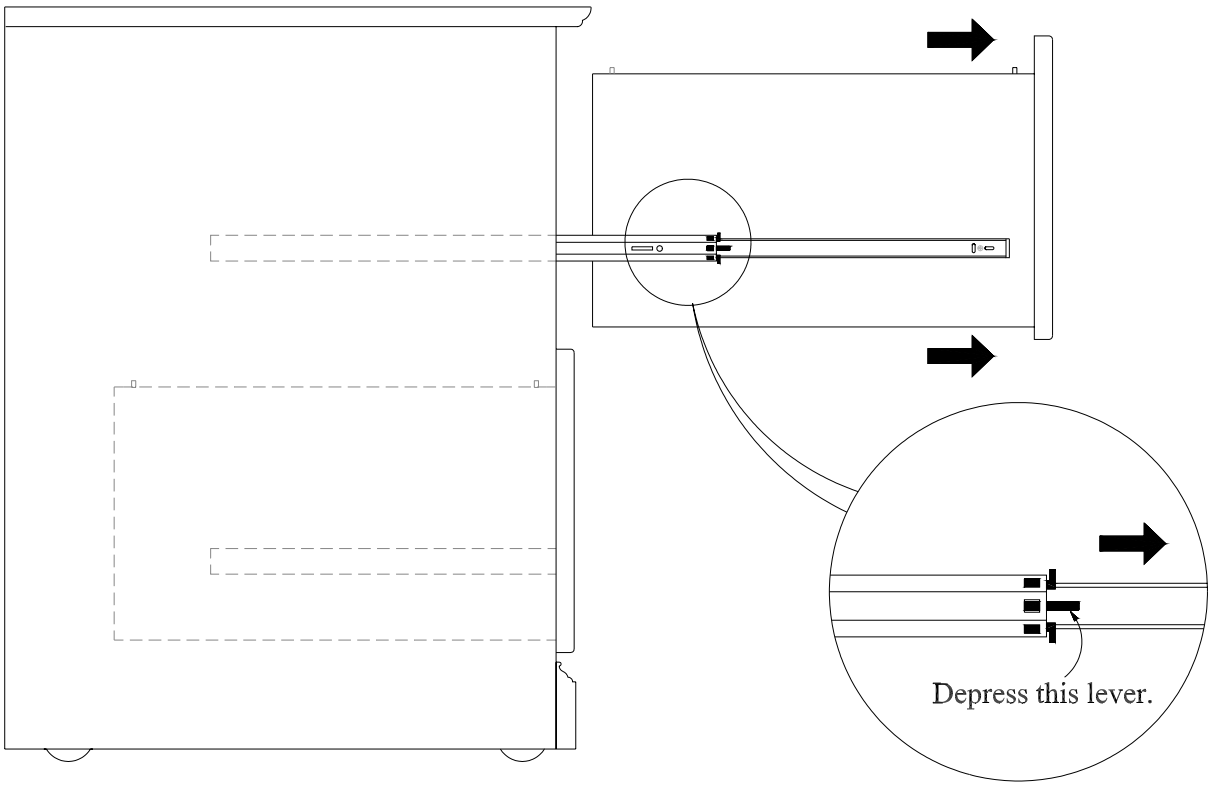

Illustration #2